REC Climate Control Unit

Heating, Cooling, Ventilation & Domestic Hot Water for your Home

Experts on indoor climate in low-energy houses

REC
INDOVENT

REC Climate Control Unit

Heating, Cooling, Ventilation & Domestic Hot Water for your Home

We are prepared for future energy requirements! Are you?

Our daily consumption is 1 kg of food and 3 litres of fluids. Compare this to the fact that every day we breathe in approximately 30 kg of air, air that few of us give a thought. 27 of those kilos come from indoor air. Studies show that Westerners stay indoors on average 90% of the day, most of that time in our own home.

Our aim is therefore that you should have the best possible indoor climate in your home. There are high demands on the indoor air in workplaces, shopping centers, gyms etc. One should set the same requirements for one's home. A Climate Control unit delivers clean, filtered and fresh air without smell or moisture transfer. Furthermore an even, balanced supply air temperature without draught.

With the REC Climate Control unit, you get the option to choose the type of heating your prefer; underfloor heating, radiators or air heating.

- Energy-efficient production of hot water and heating
- 90% heat recovery from indoor air
- Clean and filtered air
- No transfer of odours
- Correct filters
- Low noise levels
- No draught

The REC Climate Control unit will help you save both energy and money. You get high heat recovery and energy-efficient production of heat for both hot tap water and heating for your home. In the summer, the REC Climate Control unit supplies comfortable cooling in your house when it is hot outside.

Could it be better?

Experts on indoor climate in low-energy houses

REC Climate Control Unit

Heating, Cooling, Ventilation & Domestic Hot Water for your Home

REC Climate Control Unit

REC VP and RT Blue

- *You get a complete system with heat pump and mechanical ventilation with heat recovery:*
  - *Energy efficient solution for homes of up to 240 sqm*
  - *Easy installation - 2 units with ready-to-use connections*
  - *Modern design*
  - *Energy Class A++/A+*
  - *Designed for a Nordic climate*
  - *Very quiet*

ErP Approved

Overview

The REC Climate Control unit is a complete energy efficient solution for heating, cooling, ventilation and domestic hot water for your home. We have developed a solution giving you the great benefits of the MVHR unit, integrated with an air/water heat pump.

The REC Climate Control unit consists of our MVHR unit RT Blue, REC VP Indoor Unit and REC Outdoor Unit. The system provides:

- Energy efficient heat recovery with comfortable and filtered supply air.
- Heating for the MVHR unit´s afterheater
- Domestic hot water
- Heating for fatiators/underfloor heating
- Cooling of the supply air

The REC VP consists of a 250 litre tank equipped with electric heaters, hot water coils, heat pump control and heat exchangers. In the outdoor unit is an inverter compressor, fan, heat exchanger and a condenser. A refrigerant pipe connects the REC VP Indoor with the REC VP Outdoor, which means an efficient and safe solution for our Nordic climate. The Outdoor unit draws energy from the outside air which is then supplied to the heating system. REC VP has a working range down to about -25°C (outdoor temperature). RT Blue transmits approximately 90% of the heat energy of the dirty exhaust air to the new, filtered, supply air.

Indoor climate

The REC Climate Control unit gives you draught-free supply air with clean, filtered and fresh air without smell or moisture transfer. (Moisture might cause mould for example). Our aim is to supply a draught-free and virtually silent installation that you do not notice. A good indoor climate is characterized by good ventilation with filtered fresh air that reduces the risks of asthma and allergies.

Design and installation

The front and sides of the RT Blue and REC VP Indoor unit are powder coated in white (RAL 9016), to match. The door has a magnetic strip. All connections are on the top. The MVHR unit and the REC VP Indoor unit is provided with ready-to-use connections for easy installation. If need be, the MVHR and the REC VP Indoor may be placed separately.

The REC Outdoor unit has a modern and aesthetic design.

Control units

There are two separate control units, one for the MVHR unit and one for the REC VP Indoor unit. These two control units communicate with each other. The control unit in the REC VP always ensures that the heat pump is prioritized, before any additional heating is added via the electric heater.

REC Climate Control Unit

Heating, Cooling, Ventilation & Domestic Hot Water for your Home

Ventilation

With the MVHR unit you will get clean, filtered, fresh air and a balanced, controllable and even supply air temperature without draught.

The MVHR unit ensures that there is no air leakage between the exhaust air and the fresh incoming air. This provides a cost-effective operation, excellent comfort and a good indoor climate.

Heat generation

By default, the heat for the house is generated via the REC VP Indoor unit according to an outdoor temperature compensated curve and does not normally need to be changed. For more information see the manual for the REC VP.

The REC VP heats the domestic hot water, radiators and underfloor heating. If necessary, an electric heater will assist. The temperature in the heat pump can provide domestic water of approx. +55°C. If you would like a higher temperature this can be pre-set.

Heat generation using air heating

The REC Climate Control unit makes it possible to use air heating. Traditionally, you have a separate heating and ventilation system in your home. As building energy performance recuirements are becoming more stringent it is possible to use only the ventilation system to heat the house. For this to work you need a controlled MVHR system. With an MVHR system, not only ventilation and heat recovery is made possible, but thanks to the low power requirements of the house, the system can also provide for heating and cooling of the house.

Hydronic floor heating and radiators are replaced by the air heating system. This is an option which is often both comparatively cheap and simple. To get the best possible system and indoor climate, cutting-edge technology is required. This includes a customized control function, in order to get the special features you need in a house with air heating. The MVHR unit Blue 4 has the option “ECO2”, which provides both forced heating and cooling. A stepless regulation ensures a sufficient and even temperature.

Cooling

In summer, the system delivers comfort cooling. You set the temperature you would like for the supply air on the display of the MVHR unit. The unit is equipped with an automatic stepless bypass, which means that the control system will cool your home during chilly summer nights. This means, the MVHR unit will open the bypass damper to let in cold outdoor air. If the outdoor air is so warm that even with a fully open bypass the temperature exceeds the set point, the MVHR unit will communicate with the REC VP to start the cooling. The water coil in the REC Climate Control unit is a combined heating and cooling coil, which allows the system to produce a comfortable indoor climate.

Hot water production

The domestic water always has priority over the heating and cooling. A desired setpoint of the water temperature is set on the control panel for the REC VP Indoor unit (red display).

Adapted for the Nordic climate and high altitude

The REC VP Outdoor unit has a reinforced corrosion protection. In order to avoid compressor failure when starting the REC VP Outdoor unit in cold conditions, it is equipped with a heating cable around the oil in the compressor and the condensate drain, to ensure the flow of drainage water. The outdoor unit has an optimized defrosting function in order to detect different conditions of cooling/humidity, so as not to defrost unnecessarily.

Defrosting

REC Temovex Blue 4 has a unique defrosting process. Directly after the heat exchanger, 30% of the already heated supply air is returned to the incoming outdoor air to increase the fresh air temperature during extreme outdoor temperatures (option).

A stepless defrosting damper regulates this heat transfer in an optimal way, to avoid freezing of the heat exchanger.

The supply air flow & the exhaust air flow in and out of the air handling unit will not be affected during the defrost cycle.

In the REC VP Outdoor unit large volumes of air are circulating and energy is harvested from the air, resulting in frost on the outdoor unit heat exchanger at low outdoor temperatures. Our defrost program has been developed to defrost only when necessary and for as short a time as possible. The heat exchanger in the outdoor unit is also coated with nanoparticles to hamper frost formation and improve performance.

Energy

The COP value (coefficient of performance) that indicates how much energy (in the form of heat) you can get out of a heat pump, is the energy (electricity) required to run the compressor. The REC VP Outdoor unit has an inverter compressor, which automatically adjusts the power according to your heating needs. If it is cold outside the compressor works more and when it is warmer outside the compressor slows down. This means that you get an energy-efficient operation which saves money and the system never produces hotter water than required.

Maintenance

The control system for the FTX unit has an integrated filter alarm. The filter alarm is based on a fixed 12 month period and is displayed by an LED on the display panel. The alarm can easily be reset via the control panel.

New filters can be ordered at: www.recindovent.se

Further information about maintenance can be found in the manuals.

Quick Selection Chart

3 different heat pump power options	Total kW
VP 1 = Heat pump, installed power for heating	4,5
VP 2 = Heat pump, installed power for heating	6,0
VP 3 = Heat pump, installed power for heating	7,5

REC Climate Control Unit

Heating, Cooling, Ventilation & Domestic Hot Water for your Home

1. RT Blue
2. REC VP Innedel
3. Display REC VP Indoor unit
4. REC VP Outdoor unit
5. RT Blue control panel (inside door)

4

Technical Data

RT Blue 4	After heater – Water, water temp. 55/45°C
Rated output	265 W
Rated output after-heater	1500 W, (2800 W oprion) at 85 ltr/sec
Rated output fans	169 + 96 W
Voltage/Frequency	230 V, 50 Hz
Fuse	10 A
Filter supply air/extract air	Pocket ePM1 50% / Coarse 60%
Weight	97 kg
Water connection	DN12
Dimensions (WxDxH)	485x620x1940 mm*)
Duct connections	4 x 160 mm
Condensate drain	8 mm

*) *The unit has adjustable feet.*
Min height = 1920 mm, Max height = 1940 mm

**) *At 35°C water temperature and +7°C / +2°C / -7°C*

	REC VP
Refrigerant	R410A
Max rated output	16,5 kW
Power consumption VP	900-2800 W
Operating range outdoor temp.	-25°C to +43°C
Domestic hot water boost	1500 W
Buffer tank volume, material	250 L, stainless steel
Hot water coil	20+20 m, dim. 28 mm sprial stainless steel
Sound level indoor/outdoor	35/56 dB(A)
Dimensions Indoor unit/ Outdoor unit (WxDxH)	610x672x1933 mm / 866x353x750 mm
Weight Indoor unit/Outdoor unit	140 kg / 62,5 kg
COP**)	5,22 / 3,86 / 2,64

Dimensions RT Blue 4 / REC VP Indoor unit

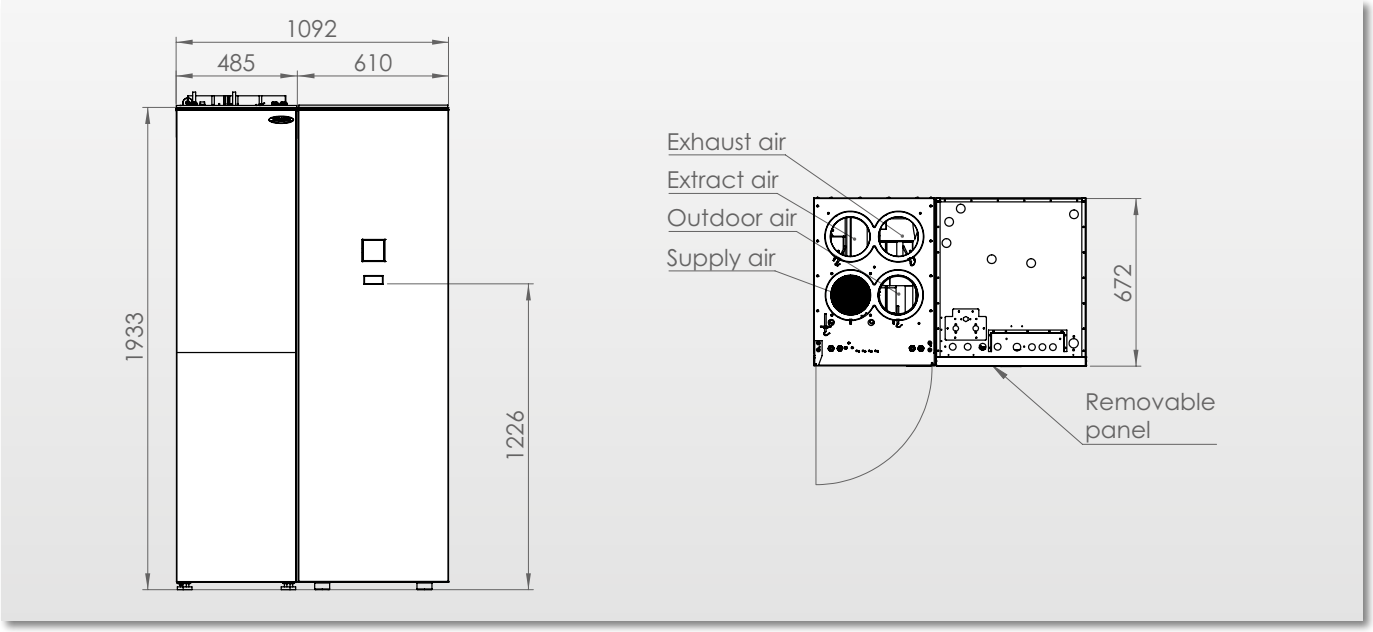

Dimensions REC VP Outdoor unit

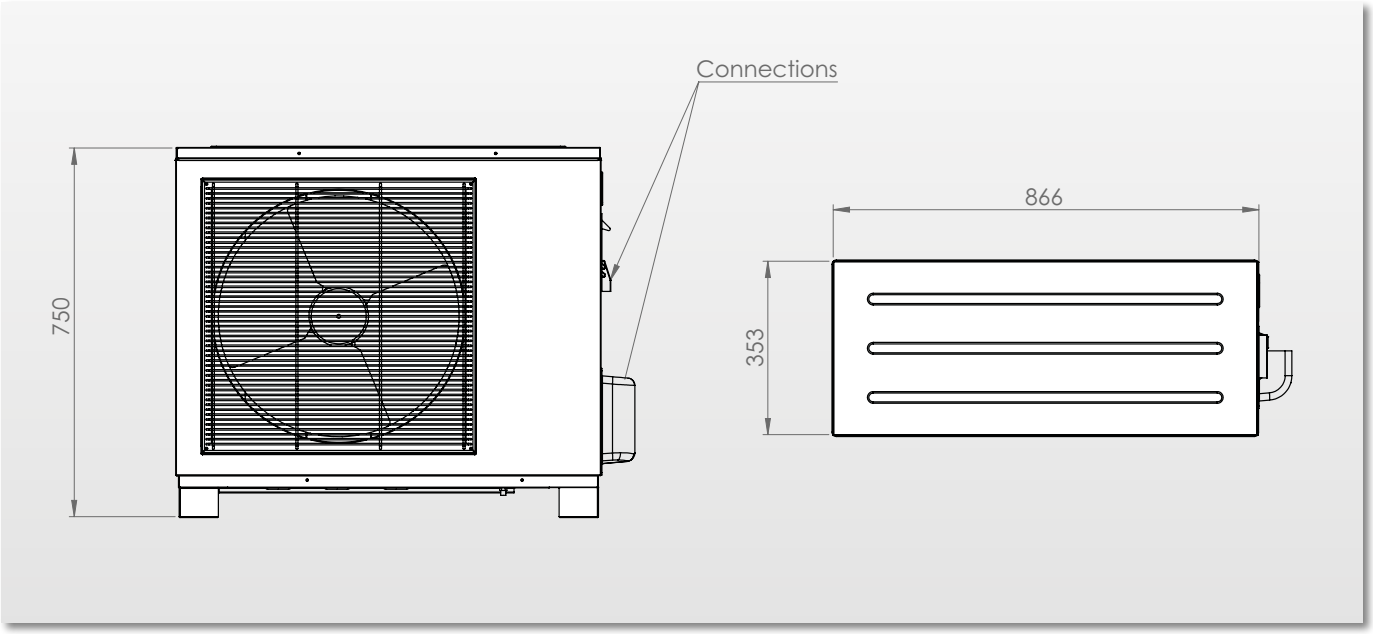

REC Climate Control Unit

Heating, Cooling, Ventilation & Domestic Hot Water for your Home

Standard control functions

RT Blue 4:

- High efficiency counter-flow heat exchangers
- Water coil, external (incl. 2-way valve and stepless 1-100% also used for cooling)
- Automatic by-pass with cooling recovery (stepless 0-100%)
- Individually set min, normal and max flow.
- EC fans
- Supply air control
- Pocket filters Coarse 60% (exhaust air), ePM1 50% (supply air)
- Alarm output
- Power supply for outdoor air damper
- 3 (digital) inputs for external control
- Night cooling
- Calendar function to set periods when not at home

Other options in addition to the standard can be found in our product brochure for REC Temovex Blue 4.

REC VP Indoor unit

- 250 L buffer tank
- Complete heating control
- Heat exchanger (PHE plate heat exchanger)
- Circulation pump
- Expansion tank
- Electric heating unit (supplement heat/ warm water)
- Integrated solution for both heating and domestic water

REC VP Outdoor unit

- Inverter controlled heat pump
- Heat exchanger/condenser
- Compressor (Twin Rotary)
- Fan
- Automatic backup during stoppage

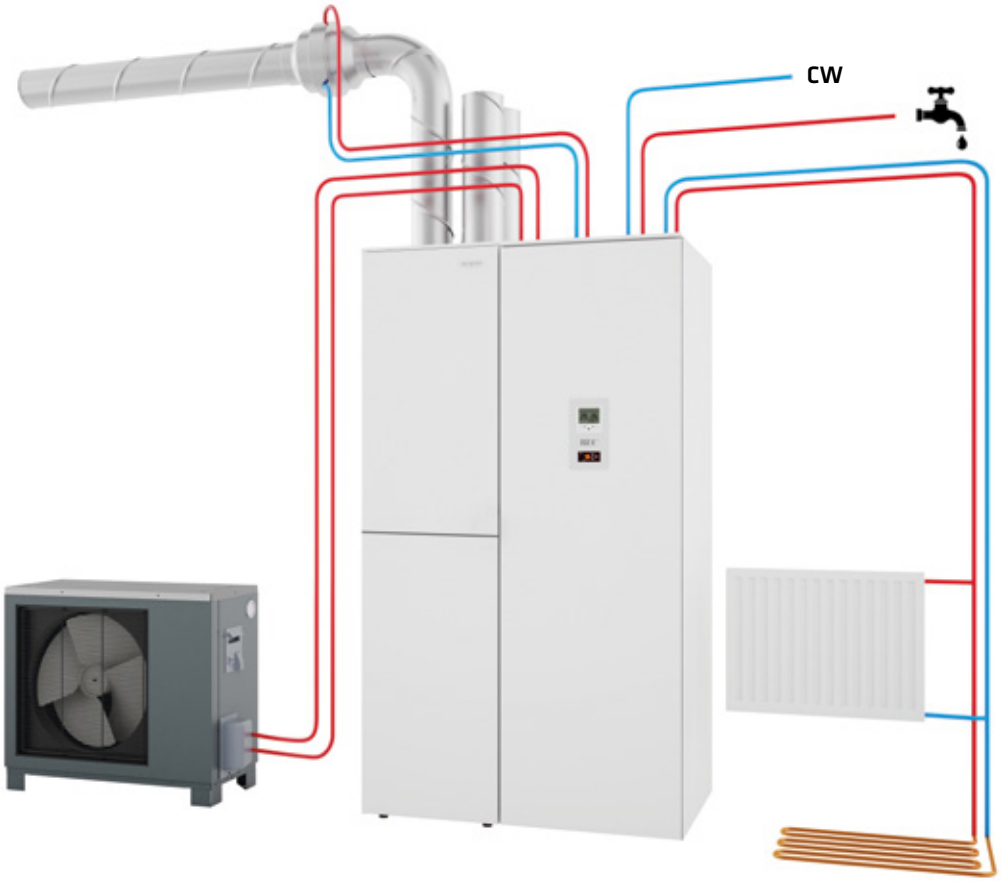

REC Climate Control Unit

Heating, Cooling, Ventilation & Domestic Hot Water for your Home

Control panel

RT Blue 4 is equipped with a user-friendly control panel that is integrated in the front panel (inside the door). The ventilation/heating system is controlled from this panel. There is an option to purchase separate remote panels (available in three different versions).

The REC VP Indoor unit has a dual control panel. Via the red display, you can adjust the temperature of the domestic hot water.

Display FTX unit RT Blue 4

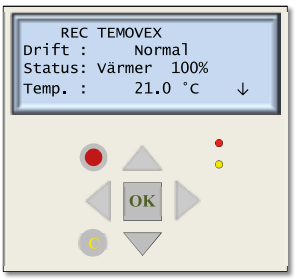

▲	**UP**
▼	**DOWN**
▶	**RIGHT**
◀	**LEFT**
OK	**CONFIRM**
●	**ALARM**
C	**CORRECT/UNDO**

Alarm	Flashing	There are one or several alarms that have not been acknowledged.
	Not flashing	There are one or several alarms that have been acknowledged, but not dealt with.
Setting	Flashing	User may adjust the settings in this menu screen.
	Not flashing	Settings cannot be adjusted by the user.

Display REC VP

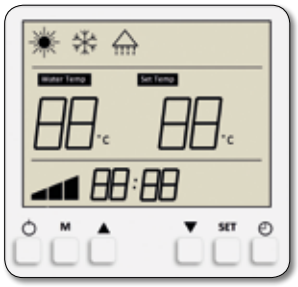

⏻	**ON/OFF**
M	**MODE**
▲	**UP**
▼	**DOWN**
SET	**CONFIRM/LOCK**
◴	**TIMER**

Symbol	Function	Explanation	Active mode
	Heat generation	When the heating mode is chosen, the symbol is shown in the display	The symbol is shown in the display when the function is chosen, and flashes when it is activated
	Cooling	When cooling is chosen, the symbol is shown in the display	The symbol is shown in the display when the function is chosen, and flashes when it is activated
	Hot water generation	When the hot water mode is chosen, the symbol is shown in the display	The symbol is shown in the display when the function is chosen, and flashes when it is activated

Remote Panels (Option)

Remote Panel Simple
Includes a thermostat and dial wheel for adjustment and a set-point. The unit is used as a room thermostat, but you may also shift the set-point +/- 3° C. Analogue signals.

Remote Panel 3-way
Simple remote panel for easy connection of normal mode, minimum mode and forced mode.

Remote Panel with Display
Remote panel with display is the most advanced remote panel. The different temperature settings can be displayed and modified as required. You may also set the fan speeds. In addition, it has an “away” button and displays various information about the status of the unit.

REC 19-05-23
17-0057_ENG teamfront.se

Medlem i

Svensk Ventilation
Bransch i samverkan

A member of Svensk Ventilation
(REC is a member of this Trade organization)

REC Indovent AB reserves the right to make alterations to specification and construction without prior notification.

REC Indovent AB
P.O. Box 37, SE-431 21 Mölndal, Sweden
Visiting address: Kärragatan 2
Tel: +46 31 67 55 00
Fax: +46 31 87 58 45

Certified acc. to ISO 9001/14001

REC
INDOVENT

www.rec-indovent.se

Experts on indoor climate in low-energy houses